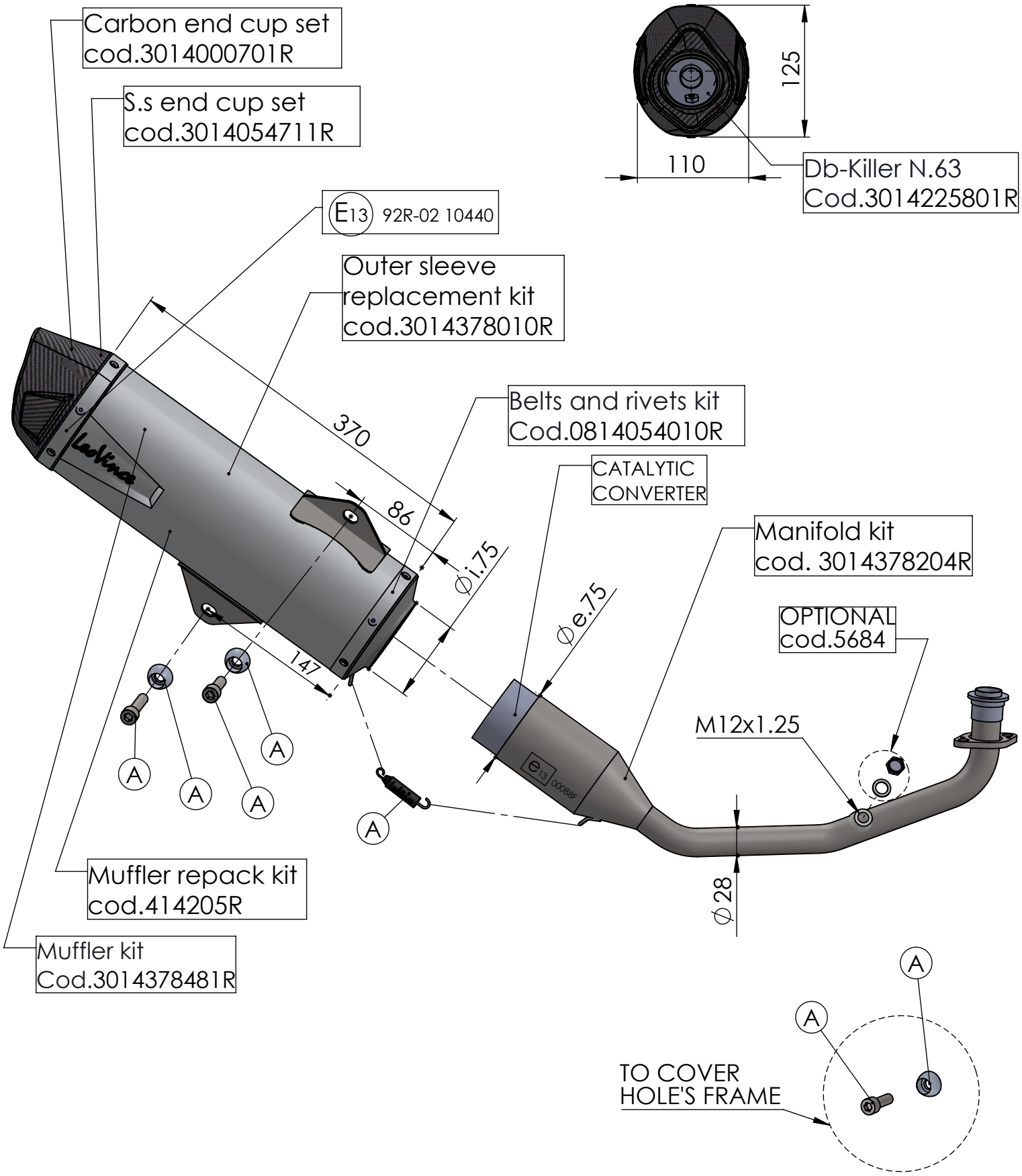

ART. 14378EK - SPARE PARTS

YAMAHA X-MAX 125 / TECH MAX

Ⓐ FITTING KIT cod. 3014378601R